इंटरनेट मानक

Disclosure to Promote the Right To Information

Whereas the Parliament of India has set out to provide a practical regime of right to information for citizens to secure access to information under the control of public authorities, in order to promote transparency and accountability in the working of every public authority, and whereas the attached publication of the Bureau of Indian Standards is of particular interest to the public, particularly disadvantaged communities and those engaged in the pursuit of education and knowledge, the attached public safety standard is made available to promote the timely dissemination of this information in an accurate manner to the public.

"जानने का अधिकार, जीने का अधिकार"
Mazdoor Kisan Shakti Sangathan
"The Right to Information, The Right to Live"

"पुराने को छोड नये के तरफ"
Jawaharlal Nehru
"Step Out From the Old to the New"

IS 8618 (1977): Spacing Collars for Milling Arbors [PGD 32: Cutting tools]

"ज्ञान से एक नये भारत का निर्माण"
Satyanarayan Gangaram Pitroda
"Invent a New India Using Knowledge"

Act Number 22 of 2005
The Indian Parliament
RIGHT TO INFORMATION

Made Available By
Public.Resource.Org

"ज्ञान एक ऐसा खजाना है जो कभी चुराया नहीं जा सकता है"
Bhartṛhari—Nītiśatakam
"Knowledge is such a treasure which cannot be stolen"

BLANK PAGE

BRUTUM FULMEN

IGNORANTIA JURIS NON EXCUSAT

PROTECTED BY COPYRIGHT

Indian Standard (Reaffirmed 2002)

SPECIFICATION FOR SPACING COLLARS FOR MILLING ARBORS

1. Scope — Covers the dimensions and requirements for spacing collars for use on milling arbors.

2. Dimensions

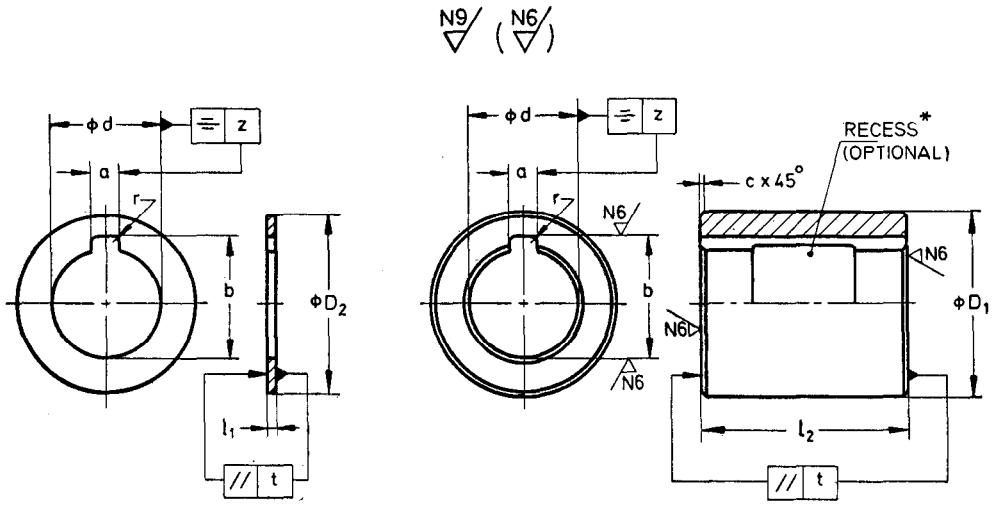

All dimensions in millimetres.

d	C11	16	22	27	32	40	50	60	80	100
D_1	h11	27	34	41	47	55	69	84	109	134
D_2	h11	26	33	40	46	54	68	83	—	—
a	C11	4	6	7	8	10	12	14	18	25
b		17·7	24·1	29·8	34·8	43·5	53·5	64·2	85·5	107·0
Tol on *b*		$^{+0·1}_{0}$		$^{+0·2}_{0}$						
r	*Max*	0·6	1	1·2	1·2	1·2	1·6	1·6	2	2·5
c		0·4	0·4	0·4	0·6	0·6	0·6	0·6	1	1
z		0·05		0·08						
l_1		(0·03), (0·04), 0·05, 0·1, 0·2, 0·3, 0·6, 1							—	
$l_2 \pm 0·1$		2, 3, 6								
		10								
		—							(12), (13), (16)	
		20								
		30								
		—	60							
		—	100							
t Parallelism of faces		0·004					0·005			0·006

*Recess optional for widths ≥ 60 mm.

Note 1 — The dimensions in brackets shall be avoided as far as possible. In the case of punched collars, the periphery, the bore and the key seating should be carefully deburred.

Note 2 — Recess if provided shall have length half of l_2 and diameter one mm more than *d*.

Adopted 28 December 1977
© March 1978, ISI
Price Rs 5·00 Gr 1

INDIAN STANDARDS INSTITUTION
MANAK BHAVAN, 9 BAHADUR SHAH ZAFAR MARG
NEW DELHI 110002

Small Tools Sectional Committee, EDC 45; Milling Cutters (Including Arbors) Subcommittee, EDC 45 : 2 [Ref : Doc : EDC 45 (2409)]

3. Designation

3.1 A spacing collar having diameter $d = 16$ mm and width $l_2 = 20$ mm shall be designated as:

Spacing Collar 16 × 20 IS : 8618

4. General Requirements — Other requirements according to IS : 8611-1977 ' Technical supply conditions for milling arbors and accessories '.

5. ISI Certification Marking — Details available with the Indian Standards Institution.

EXPLANATORY NOTE

This standard is in full conformity with ISO 839/II-1977 ' Milling machine arbors with 7/24 tapers Part II : Accessories ', issued by International Organization for Standardization.

Printed at Neelkamal Printers, Delhi, India

TO

IS 8618-1977 SPECIFICATION FOR SPACING COLLARS FOR MILLING ARBORS

Alteration

(*Page* 1, *clause* 2):

a) *Figure* — Substitute the following for the existing figure:

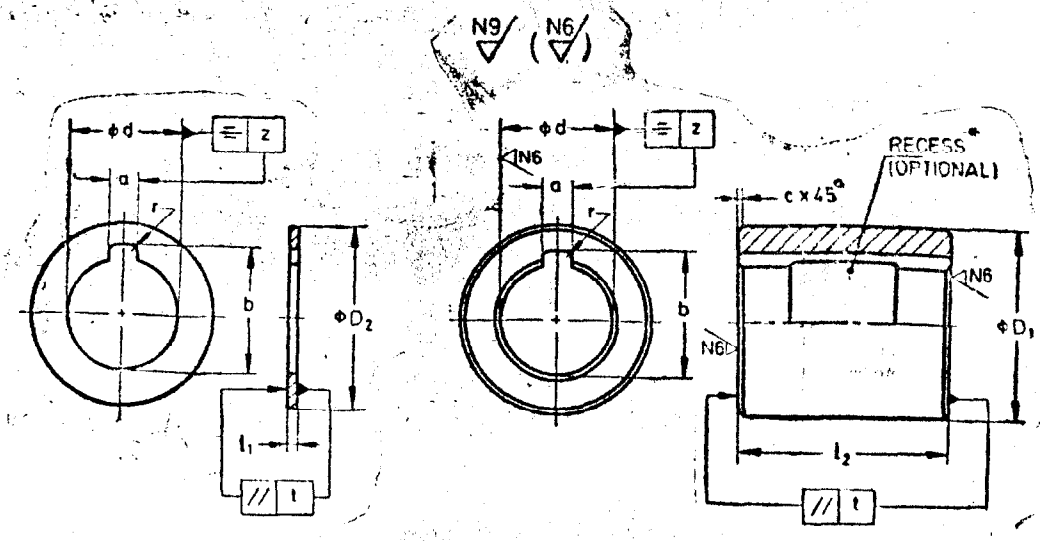

b) *Informal table, seventh row* — Substitute the following for the existing matter:

r	0·6	1·0	1·2	1·2	1·2	1·6	1·6	2·0	2·5
Tol on r	0 −0·2		0 −0·3				0 −0·5		

Compared By 00 — 09 - 11
1. MKT, MKS
2.
Finalized By